A PROJECT REPORT
on

VOICE CONTROL HOME AUTOMATON

Submitted by

Ankush Tyagi and Umesh Yadav

in partial fulfillment for the award of the degree

of

BACHELOR OF SCIENCE

in

COMPUTER SCIENCE

under the guidance of

Mrs. Purnima Rane

Department of Computer Science

N.B.Mehta (Valwada) Science College

(Sem V)

(2024 – 2025)

N.B.Mehta (Valwada) Science College

Bordi, Dist.Palghar, 401701

Department of Computer Science

CERTIFICATE

This is to certify that **Mr. Ankush Tyagi and Umesh Yadav** of **T.Y.B.Sc. (Sem V)** class has satisfactorily completed the Project **Voice Control Home Automation**, to be submitted in the partial fulfillment for the award of **Bachelor of Science** in **Computer Science** during the academic year **2024 – 2025**.

Date of Submission:

Project Guide

Head / Incharge,
Department Computer Science

College Seal

Signature of Examiner

DECLARATION

I, **Ankush Tyagi and Umesh Yadav**, hereby declare that the project entitled " **Voice Control Home Automation**" submitted in the partial fulfillment for the award of **Bachelor of Science** in **Computer Science** during the academic year **2024 – 2025** is my original work and the project has not formed the basis for the award of any degree, associateship, fellowship or any other similar titles.

Signature of the Student **Signature of the Student**

Place:

Date:

ACKNOWLEDGEMENT

First of all, I would like to express my highest gratitude to my Final Year Project Supervisor, Miss Purnima Rane for his continuous support and guidance. He had given not only essential theories and ideas in completing this project but also informally guided me in developing my personal values to make me a better person.

My earnest appreciation to the internal examiners, staffs and technicians of N.B.Mehta Science College Computer Science Department for all their guidance and assistance in helping me throughout the time of the project period.

I would also like to acknowledge my thanks to my friends who have always willingly to share ideas and sincere comments. The support and encouragement from them will always be pleasant memory throughout my life.

Finally, an honorable mention goes to my family who have always prayed for my success and given their utmost moral support in my life. I hope I can always be there for them in the way they supported me.

ABSTRACT

The essential aim of this project is to extend a home automation system the usage of an Arduino board with Bluetooth being remotely controlled through manner of way of Android smart telecall smartphone. As technology is advancing so houses are also getting smarter. Modern houses are progressively transferring from conventional switches to centralized control system, regarding far-flung controlled switches. Presently, conventional wall switches located in one-of-a-type factors of the house makes it difficult for the client to go near them to perform. Even greater it becomes greater difficult for the elderly or physical handicapped people to do so. Remote controlled home automation system gives a most contemporary-day solution with smart phones. In order to benefit this, a Bluetooth module is interfaced to the Arduino board at the receiver surrender while on the transmitter surrender, a GUI software program on the mobility telecast smartphone sends ON/OFF commands to the receiver in which hundreds are associated. By touching the preferred region on the GUI, the hundreds can be grown to end up ON/OFF remotely via this technology. The hundreds are operated through manner of way of Arduino board via Relay.

SELF-ATTESTED COPY OF PLAGIARISM

Plagiarism Scan Report

Plagiarism Checker

Report Title	voice control home automation
Generated Date	18-Oct-2024
Total Words	559
Total Characters	4003
Report Generated By	Plagiarismchecker.co
Excluded URL	None

Plagiarised	Unique	Total Words Ratio
0%	100%	86.46%

Content Checked For Plagiarism

INTRODUCTION:

Nowadays, most people use Android devices to control various devices, including lights, fans, switches, and coolers, using Bluetooth-based remote control using Arduino. Arduino is a microcontroller that interfaces with a PC and task model, allowing users to control them using code. It is connected to Bluetooth modules and relay modules, providing real-time data and control. This creates a home automation network, allowing for easy interconnection and monitoring of various devices using a smartphone.

OBJECTIVES:

The system aims to enhance user convenience by allowing voice commands to control home lighting and devices, promoting energy efficiency and convenience. It also integrates with smart devices for seamless control. Users can customize settings based on preferences, making it accessible for those with mobility challenges. The system uses an intuitive voice recognition system and continuous learning to improve responsiveness and understanding of user preferences.

SCOPE:

Voice-activated home automation offers opportunities for development in the smart home industry due to growing demand for intuitive control, particularly for people with disabilities. It also improves energy efficiency, resulting in financial and environmental

APPROVED PROJECT PROPOSAL

INTRODUCTION:

Nowadays, most people use Android devices to control various devices, including lights, fans, switches, and coolers, using Bluetooth-based remote control using Arduino. Arduino is a microcontroller that interfaces with a PC and task model, allowing users to control them using code. It is connected to Bluetooth modules and relay modules, providing real-time data and control. This creates a home automation network, allowing for easy interconnection and monitoring of various devices using a smartphone.

OBJECTIVES:

The system aims to enhance user convenience by allowing voice commands to control home lighting and devices, promoting energy efficiency and convenience. It also integrates with smart devices for seamless control. Users can customize settings based on preferences, making it accessible for those with mobility challenges. The system uses an intuitive voice recognition system and continuous learning to improve responsiveness and understanding of user preferences.

SCOPE:

Voice-activated home automation offers opportunities for development in the smart home industry due to growing demand for intuitive control, particularly for people with disabilities. It also improves energy efficiency, resulting in financial and environmental savings. Voice-activated features allow remote management and monitoring of home security, enhancing home security. Advancements in speech recognition have made voice control reliable and responsive, but privacy concerns and device compatibility remain. Voice control is expected to become the norm for intelligent, economical, and safe homes.

METHODOLOGY:

This system design consists of an Arduino board, Bluetooth module (HC-05 or HC-06), lithium battery relay modules, fan and light devices, and a power supply. The Arduino IDE is used for programming the Arduino board, while the Arduino Bluetooth Controller App is used to send voice commands from the mobile device to the Arduino. Voice recognition software can be built-in or achieved through app functionality.

The circuit design involves connecting the Bluetooth module to the Arduino, connecting the relay modules, and connecting the fan to the relay. Arduino programming involves setting up the Bluetooth communication setup, processing incoming commands, and activating/deactivating the corresponding relay. The Bluetooth Controller App is set up using an Android app, and voice commands are converted to text and sent as Bluetooth commands.

Testing and troubleshooting involve testing voice commands, debugging, and adjusting Bluetooth communication settings or troubleshooting wiring. The system is designed to control the fan and light using a smartphone or Bluetooth controller.

TOOLS AND TECHNOLGIES:

Guys, here is a list of tools you would require for making this simple project.

Tools:

1. Arduino Board (preferably Uno)
2. 2-Channel Relay Module
3. Bluetooth Module (HC-05)
4. Some Jumper Wires
5. Android phone

SOFTWARE:

1 .ArduinoIDE

2 .Arduino bluetooth Controller Apk

EXPECTED OUTCOMES:

A voice-controlled home automation project should integrate smart home devices with voice recognition systems, allowing users to control lights and appliances through simple voice commands. The interface should be user-friendly, responsive, and customizable. Automation rules should be easily set, and the system should be secure and reliable, with robust data encryption and user authentication protocols. The goal is to enhance convenience and energy efficiency in a smart home environment.

RESOURCES:

A voice-controlled home automation project requires hardware, software, and online services. Hardware includes microcontrollers like Arduino, actuators like relay modules, voice recognition software like Google Cloud Speech-to-Text, Bluetooth for device communication, and platforms like Home Assistant. Cloud services like Google Cloud IoT facilitate device management and data storage. Integrating with Google Actions links voice commands to smart home devices.

TABLE OF CONTENT

Sr no.	Content	Pg no.
1.	**Introduction**	**1**
2.	**Literature Review**	**5**
3.	**Existing System**	**7**
3.1	Existing System	7
3.2	Purposed System	8
4.	**Requirement Analysis**	**9**
4.1	Feasibility studies	9
4.2	System requirements	10
4.3	System use cases	18
5.	**Methodology**	**20**
5.1	Software Methodology	20
5.2	Hardware Methodology	21
6.	**System Design**	**22**
6.1	Circuit Diagram	23
6.2	Flow Chart Diagram	24
6.3	Gantt Chart Diagram	25
7.	**Coding**	**26**
8.	**Testing**	**27**
9.	**Conclusion**	**30**
9.1	Conclusion	30
9.2	Future Work	31
10.	**References**	**32**

INTRODUCTION

The demand for voice-controlled switch systems has increased in home environments, not just for luxury but also to assist people with special needs such as the elderly and disabled. According to the World Health Organization, there are 785 million people over the age of 15 who live with disabilities, and 110 million of them have significant difficulties functioning. Voice-controlled systems are being adopted to make home automation easier for these individuals. The goal of the project is to bring convenience to living spaces by providing interaction with the home environment. The use of voice recognition technology is necessary to control lighting systems in a simple manner.

The system needs to recognize human languages, not machine instructions or programming languages. To achieve this, analog audio needs to be converted into digital signals through analog to digital conversion. The speech patterns are stored on the hard drive and loaded into memory when the program is run. The vocabulary size of a voice recognition program is directly related to the RAM capacity of the computer. Processing speed is crucial, as it affects how quickly the computer can search the RAM for matches. Voice recognition systems may have errors due to background noise and words that sound alike but have different meanings. However, using voice, many projects related to home automation can be easily achieved, making life easier for individuals with special needs.

Fig 1.1: Voice Automation

Smart homes differ from traditional homes in that they have integrated communication systems that allow different devices to communicate with each other. This provides better control locally

and remotely, supports special needs such 2 as services for the elderly, and improves the usability and functionality of any home. Home automation systems allow one to control household appliances from a centralized control unit, which is wireless. These systems can target luxury and sophisticated home automation platforms or those with special needs like the elderly and disabled.

Voice-controlled home automation systems are becoming popular for the elderly and disabled, allowing them to perform tasks using their voices or a handheld device. Home automation for the elderly and disabled focuses on making it possible for them to remain at home, safe and comfortable, using similar technology and equipment as home automation for security, entertainment, and energy conservation.

There are many types of home automation systems like Bluetooth controlled, Intemet Controlled, Remote Controlled (IR Remote) etc. Each type has its own advantages and disadvantages.

In this project, we have designed a voice activated home automation system,where different appliances are controlled by sending a voice command.

Fig 1.1: Voice Control Home Automation

The voice activated home Automation project is implemented using Arduino UNO, Bluetooth, and a smartphone. We are showing a voice control home automation system to control appliances with their own voice command.

The voice-controlled home automation system is a technological advancement that allows users to control their home appliances and devices through voice commands. This system has proven to be particularly useful for elderly and disabled people who may have physical limitations that make it difficult for them to operate devices or appliances manually. By using voice commands, these individuals can easily and conveniently control various aspects of their home environment without the need for physical exertion or assistance from others. This technology has the potential to improve the quality of life for elderly and disabled individuals, allowing them to live more independently and comfortably in their own homes. With the increasing prevalence of smart home technology, the voice-controlled home automation system is becoming more accessible and affordable, making it a viable option for a wide range of individuals.

It can be used to turn lights on and off, adjust the temperature, control the TV and entertainment system, lock and unlock doors, and even make phone calls. This system can provide a convenient and easy-to-use solution for those who may have difficulty with physical mobility or have limited dexterity, allowing them to maintain independence and control in their daily lives.

The main aim of our system is to build a perfect companion for someone to be at home or in his/her office and control electronic appliances using voice. It’s a Bluetooth and GSM technology system based that can accept voice as direct commands and process them. The system is cheap, easy to configure and easy to use. The users should be able to control all the appliances from any point in their home or office by establishing a wireless control via Bluetooth.

The proposed scheme can produce an integrated portable system that can wirelessly control two or more appliances. We demonstrate a system that can be integrated as a single portable unit and allows the user to wirelessly control home electrical appliance by turning them ON and OFF accordingly. The voice command conveyed to the control unit has been converted to binary sequence by the microcontroller which switches the load ON/OFF as desired. The microcontroller unit takes command and performs the required decision.

Thus, the objectives of this project. An especially critical point of disability that has for a long time been confirmed is that of the older people. This type of disability makes the people affected not to work on their tasks effectively hence the lack of agility and mobility for the various 3 working experiences.

Automation is a trending topic in the 21st century making it play a key role in our daily lives. The main attraction of any automated system is reducing human labour, effort, time, and errors due to human negligence. With the development of modem technology ,smart phones have become a necessity for every person on this planet. Applications are being developed on android systems that are useful to us in many ways. Another upcoming technology is natural language processing which enables us to command and control things with our voice. Combining all of these, our paper presents a micro controller based voice controlled home automation system using smart phones. Such a system will enable users to have control over every appliance in his/her home with their voice. All that the user needs are an android smartphone ,which is present in everybody's hand nowadays, and a control circuit. When the first computers came around, achieving the level of sophistication to narrate commands using voice to a machine was only realised in science fiction. However, with tremendous breakthrough in the field, we are at the precipice of truly using voice to interface with devices.

Voice controlled wireless smart home system has been presented for elderly and disabled people. The concept of controlling home appliances using human voice is interesting. The proposed system has two main components, they are voice recognition system, and wireless system. This system to control home appliances uses a voice controlled android application. By the increasing use of PC (personal computers), internet, mobile phone, and wireless technology, it makes it easy for a user to remotely access and control the appliances.

A lot of research has been done and many solutions have been proposed to remotely access the appliances. Some of them used internet, wireless technology to communicate and control home appliances, others used Bluetooth and GSM technology for controlling the home appliances. The main aim of our system is to build a perfect companion for someone to be at home. Home automation research targeted many needs like applications that provide the luxury smart requirements while some threw light on the special needs for elderly and disabled etc. our system is a computer based system that can accept voice to direct commands and process them. The system provides us switching any device ON/OFF

LITERATURE REVIEW

In recent years, the integration of voice-controlled systems into home automation has emerged as a transformative technological trend. The convergence of artificial intelligence (AI), the Internet of Things (IoT), and natural language processing (NLP) has paved the way for smart homes that allow users to control a wide range of devices—lighting, heating, security, entertainment, and appliances—through voice commands. Key players in the development of these systems include major technology companies like Amazon, Google, and Apple, which have leveraged their AI platforms, such as Amazon Alexa, Google Assistant, and Apple Siri, to create intuitive voice-controlled interfaces (Vozzi et al., 2019). These systems rely heavily on NLP algorithms to understand user commands and execute tasks in real-time, offering a seamless interaction between humans and machines.

The advantages of voice-controlled home automation are multifaceted, with convenience and accessibility being at the forefront. For people with mobility impairments or disabilities, voice-controlled systems have proven to be a significant aid, enabling them to interact with their environment without needing physical engagement (Patel et al., 2020). Moreover, these systems are beneficial in enhancing the overall user experience, providing a hands-free interface for controlling various household operations, which can be especially useful during busy or multitasking moments. Voice commands enable a more natural and intuitive interaction, eliminating the need for traditional physical interfaces like remotes or mobile apps.

However, the adoption of voice-controlled home automation is not without challenges. One of the major concerns revolves around privacy and security. Since voice-controlled systems often involve the constant listening of users' commands, there are significant risks related to unauthorized access and data breaches (Zeng et al., 2019). Researchers have highlighted the need for robust encryption, secure voice recognition, and privacy-preserving protocols to mitigate these risks. Furthermore, the potential for misinterpretation of commands or failure in understanding context remains a limitation. While advancements in AI and NLP have significantly improved accuracy, these systems still struggle in complex scenarios or when dealing with accents, dialects, or ambiguous commands (Jouandeau et al., 2021).

Another area of interest in voice-controlled home automation is its energy efficiency potential. Studies have shown that smart home systems can contribute to energy conservation by optimizing the usage of household resources based on user preferences and real-time data (Marques et al., 2020). For instance, voice-controlled systems can automate temperature settings, lighting, and even appliance usage based on occupancy patterns, reducing energy consumption. The integration of smart meters and energy analytics with voice-control features can allow users to monitor their energy usage and make more informed decisions about consumption, contributing to more sustainable living.

Looking toward the future, there is growing interest in improving the interoperability of voice-controlled home automation systems with other IoT devices. Researchers argue that a more unified ecosystem where voice-controlled platforms can seamlessly communicate with different smart appliances, regardless of the manufacturer, would enhance user experience and offer more advanced automation capabilities (Cui et al., 2021). Moreover, further advancements in AI and machine learning can lead to more personalized and context-aware voice assistants, capable of learning user preferences over time and anticipating needs before they are voiced.

In summary, voice-controlled home automation represents a significant leap in the evolution of smart homes, blending convenience, accessibility, and energy efficiency. While challenges related to privacy, security, and system limitations exist, ongoing research and technological advancements continue to address these issues. As AI, IoT, and voice recognition technologies advance, it is expected that voice-controlled automation will become an increasingly integral part of everyday life, making homes smarter, more connected, and more energy-efficient.

EXISTING SYSTEM

3.1 Existing System

The existing system is voice recognition system for home automation the system is made up of a V3 voice recognition module, an arduino board and relay modules. For the system to work, the voice recognition module must be trained first before it can recognize voice commands. The voice recognition module used can be set to training mode by uploading its appropriate code. Upon training the system, the trainer gives specific ID to the different voice commands and when a voice command is issued, the specific ID is sent to the microcontroller which in turn through the relay implements control; either to turn off or on a device. This system had some limitations ranging from control distance to difficulty in recognizing commands when there is noise in the environment of usage.

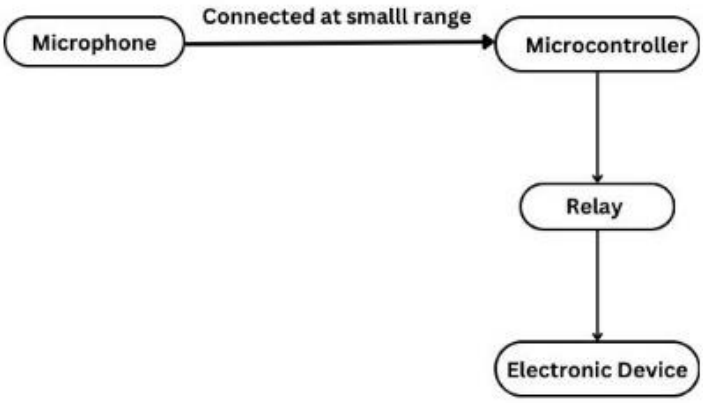

Fig 2.1: Block diagram of existing system

The existing system though designed to work wirelessly, have some constraints with portability, mobility, and accessibility; as they require some sort of presence of the operator at the speech recognition unit as well as the immobility of the speech recognition section of the individual systems. This has made it that there must be extra hardware designed and used alongside the entire system.

PURPOSED SYSTEM

3.2 Purposed System

The proposed system is voice controlled and it consists of a microcontroller board, a Bluetooth module, and an android phone acting as the communication channel between the user and the device. The system is built based on wireless communication between the user and the device. When the user sends an audio (voice) command through the android phone, it is then received by the microcontroller wireless via the Bluetooth module, the microcontroller further decrypts the commands to a form of code, processes this coded information, and based on the information triggers the output signal through its output pins to the relays connected to its pins. The relay(s) then does a switching action.

The proposed system enables the interface for a Bluetooth medium and a microcontroller board and also enables activation of communication between a user of an android device and a Bluetooth enabled microcontroller board wirelessly via Bluetooth communication and also detect and transfer speech data via Bluetooth to the microcontroller board.

The system has a transmitter unit which is made of an android phone with a software called BLUO installed in it. Voice data is collected into the BLUO software via the microphone of the mobile phone, encoded and transmitted over Bluetooth to the receiving unit. The receiving unit in turn based on the data received turns on or off a switch which controls output devices

REQUIREMENTS ANALYSIS

4.1 Feasibility studies

Feasibility studies are conducted to evaluate the practicality and potential success of a proposed project. In the case of a voice-controlled home automation project, several feasibility studies can be conducted to ensure that the project is feasible and can be completed within budget and time constraints.

Fig 4.1 Automation Through Mobile

1. Technical Feasibility: The technical feasibility study is conducted to determine if the technology needed for the project is available and can be implemented within the constraints of the project. For the voice-controlled home automation project, the technical feasibility study will determine if the hardware and software components needed for the project are available and can be integrated to work together. This study will also identify any technical challenges that may arise during the project and determine if they can be overcome.

2. Economic Feasibility: The economic feasibility study is conducted to determine if the proposed project is financially viable. This study will identify the estimated costs of the project, including the hardware and software components, labour costs, and any other expenses associated with the project. The study will also identify the potential benefits of the project, including any cost savings,

increased productivity, or other advantages. The 11 economic feasibility study will help to determine if the project can be completed within budget and if it will provide a positive return on investment.

3. Operational Feasibility: The operational feasibility study is conducted to determine if the proposed project can be implemented and integrated into the existing operational environment. For the voice-controlled home automation project, the study will evaluate if the system can be integrated with existing home automation systems or if it will require significant modifications to the existing setup. This study will also identify any potential operational challenges that may arise during the implementation of the system.

4. Legal Feasibility: The legal feasibility study is conducted to identify any legal and regulatory issues that may arise during the implementation of the project. This study will determine if the voice-controlled home automation system complies with local laws and regulations, including privacy and data protection laws.

5. Schedule Feasibility: The schedule feasibility study is conducted to determine if the proposed project can be completed within the established timeline. For the voice-controlled home automation project, this study will evaluate the estimated time required to complete each phase of the project, including hardware and software installation, testing, and integration. The study will help to determine if the project can be completed within the desired timeframe. In conclusion, the feasibility studies for the voice-controlled home automation project are essential to ensure that the project is feasible, viable, and can be completed within the established budget, time, and operational constraints. By conducting these studies, project managers can identify potential challenges and risks, develop contingency plans, and make informed decisions to ensure the successful completion of the project.

4.2 System requirements

4.2.1 Arduino hardware part

Arduino is open-source hardware. The hardware reference designs are distributed under a Creative Commons Attribution Share-Alike 2.5 license and are available on 12 the Arduino website. Layout and production files for some versions of the hardware are also available. Although the hardware and software designs are freely available under copyleft licenses, the developers have requested the name Arduino to be exclusive to the official product and not be used for derived works without permission. Most Arduino boards consist of an Atmel 8-bit AVR microcontroller (ATmega8, ATmega168, ATmega328, ATmega1280,

ATmega2560) with varying amounts of flash memory, pins, and features. The 32-bit Arduino Due, based on the Atmel SAM3X8E was introduced in 2012.

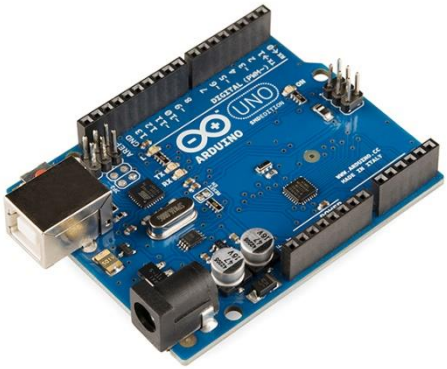

Fig 4.2 Arduino Uno

The boards use single or double-row pins or female headers that facilitate connections for programming and incorporation into other circuits. These may connect with add-on modules termed shields. Multiple and stacked shields may be individually addressable via an I²C serial bus. Arduino microcontrollers are preprogramed with a boot loader that simplifies uploading of programs to the onchip flash memory.

The default bootloader of the Arduino UNO is the Opti boot bootloader. Boards are loaded with program code via a serial connection to another computer. Some serial Arduino boards contain a level shifter circuit to convert between RS232 logic levels and transistor–transistor logic (TTL) level signals. Current Arduino boards are programmed via Universal Serial Bus (USB), implemented using USB-to-serial adapter chips such as the FTDI FT232.

Other variants, such as the Arduino Mini and the unofficial Boarduino, use a detachable USB-to serial adapter board or cable, Bluetooth, or other methods. When used with traditional microcontroller tools, instead of the Arduino IDE, standard AVR in-system programming (ISP) programming is used. Many enhance 13 the basic Arduino by adding output drivers, often for use in school-level education, to simplify making buggies and small robots. Others are electrically equivalent but change the form factor, sometimes retaining compatibility with shields, sometimes not. Some variants use different processors, of varying compatibility.

4.2.2 Arduino software part IDE

The Arduino integrated development environment (IDE) is a cross-platform application (for Windows, macOS, Linux) that is written in the programming language Java. It originated from the IDE for the languages Processing and Wiring. It includes a code editor with features such as text cutting and pasting, searching, and replacing text, automatic indenting, brace matching, and syntax highlighting, and provides simple one-click mechanisms to compile and upload programs to an Arduino board. It also contains a message area, a text console, a toolbar with buttons for common functions and a hierarchy of operation menus.

The source code for the IDE is released under the GNU General Public License, version 2. The Arduino IDE supports the languages C and C++ using special rules of code structuring. The Arduino IDE supplies a software library from the Wiring project, which provides many common input and output procedures. User-written code only requires two basic functions, for starting the sketch and the main program loop, which are compiled and linked with a program stub main () into an executable cyclic executive program with the GNU toolchain, also included with the IDE distribution. A program written with the Arduino IDE is called a sketch. Sketches are saved on the development computer as text files with the file extension. ino. Arduino Software (IDE) pre-1.0 saved sketches with the extension. pde.

A minimal Arduino C/C++ program consist of only two functions: setup (): This function is called once when a sketch starts after power-up or reset. It is used to initialize variables, input and output pin modes, and other libraries needed in the sketch. loop (): After setup() has been called, function loop() is executed repeatedly in the main program. It controls the board until the board is powered off or is reset.

Blink example Most Arduino boards contain a light-emitting diode (LED) and a load resistor connected between pin thirteen and ground, which is a convenient feature for many tests and program functions. A typical program for a beginning Arduino programmer blinks a LED repeatedly. This program uses the functions pinMode (), 14 digitalWrite(), and delay(), which are provided by the internal libraries included in the IDE environment. This program is usually loaded into a new Arduino board by the manufacturer.

4.2.3 Relay

A relay is an electrically operated switch. Many relays use an electromagnet to mechanically operate a switch, but other operating principles are also used, such as solid-state relays.

Fig 4.3: 2 Channel Relay

Relays are used where it is necessary to control a circuit by a separate low-power signal, or where several circuits must be controlled by one signal. The first relays were used in long distance telegraph circuits as amplifiers: they repeated the signal coming in from one circuit and re-transmitted it on another circuit. Relays were used extensively in telephone exchanges and early computers to perform logical operations. On a single coil device, the relay will operate in one direction when power is applied with one polarity and will reset when the polarity is reversed. On a dual coil device, when polarized voltage is applied to the reset coil the contacts will transition. AC controlled magnetic latch relays have single coils that employ steering diodes to differentiate between operate and reset commands.

The Arduino Relay module allows a wide range of microcontroller such as Arduino, AVR, PIC, ARM with digital outputs to control larger loads and devices like AC or DC Motors, electromagnets, solenoids, and incandescent light bulbs. This module is designed to be integrated with 2 relays that it is capable of control 2 relays. The relay shield uses one QIANJI JQC-3F high-quality relay with rated load 7A/240VAC,10A/125VAC,10A/28VDC.The relay output state is individually indicated by a light-emitting diode.

Relays are used wherever it is necessary to control a high power or high voltage circuit with a low power circuit, especially when galvanic isolation is desirable. The first application of relays was in

long telegraph lines, where the weak signal received at an intermediate station could control a contact, regenerating the signal for further transmission. High-voltage or high-current devices can be controlled with small, low voltage wiring and pilots' switches. Operators can be isolated from the high voltage circuit. Low power devices such as microprocessors can drive relays to control electrical loads beyond their direct drive capability. In an automobile, a starter relay 15 allows the high current of the cranking motor to be controlled with small wiring and contacts in the ignition key. Electromechanical switching systems including Strowger, and Crossbar telephone exchanges made extensive use of relays in ancillary control circuits. The Relay Automatic Telephone Company also manufactured telephone exchanges based solely on relay switching techniques designed by Gotthilf Ansgarius Betulander. The first public relay based telephone exchange in the UK was installed in Fleetwood on 15 July 1922 and remained in service until 1959. The use of relays for the logical control of complex switching systems like telephone exchanges was studied by Claude Shannon, who formalized the application of Boolean algebra to relay circuit design in A Symbolic Analysis of Relay and Switching Circuits.

Relays can perform the basic operations of Boolean combinatorial logic. For example, the boolean AND function is realised by connecting normally open relay contacts in series, the OR function by connecting normally open contacts in parallel. Inversion of a logical input can be done with a normally closed contact. Relays were used for control of automated systems for machine tools and production lines.

The Ladder programming language is often used for designing relay logic networks. Early electro-mechanical computers such as the ARRA, Harvard Mark II, Zuse Z2, and Zuse Z3 used relays for logic and working registers. However, electronic devices proved faster and easier to use. Because relays are much more resistant than semiconductors to nuclear radiation, they are widely used in safety-critical logic, such as the control panels of radioactive waste-handling machinery. Electromechanical protective relays are used to detect overload and other faults on electrical lines by opening and closing circuit breakers.

4.2.4 Bluetooth module

HC-05 module is an easy to use Bluetooth SPP (Serial Port Protocol) module, designed for transparent wireless serial connection setup. The HC-05 Bluetooth Module can be used in a Master or Slave configuration, making it a great solution for wireless communication. This serial port Bluetooth module is fully qualified Bluetooth V2.0+EDR (Enhanced Data Rate)3Mbps Modulation with complete 2.4GHz radio transceiver and baseband. It uses CSR Blue core 04-External single chip Bluetooth system with CMOS technology and with AFH (Adaptive Frequency 16 Hopping Feature). Bluetooth Module HC-05 The Bluetooth module HC-05 is a MASTER/SLAVE module.

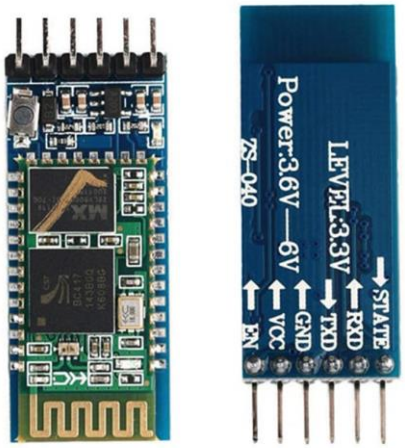

Fig 4.4: Bluetooth Module

The HC-05 Bluetooth Module has 6pins. They are as follows: ENABLE: When enable is pulled LOW, the module is disabled which means the module will not turn on and it fails to communicate. When enable is left open or connected to 3.3V, the module is enabled i.e., the module remains on, and communication also takes place. Vcc: Supply Voltage 3.3V to 5V GND: Ground pin TXD & RXD: These two pins function as an UART interface for communication STATE: It acts as a status indicator.

When the module is not connected to paired with any other Bluetooth device, signal goes Low. At this low state, the led flashes continuously which denotes that the module is not paired with another device. When this module is connected to/paired with any other Bluetooth device, the signal goes High. At this high state, the led blinks with a constant delay say for example 2s delay which indicates that the module is paired.

A Bluetooth module is interfaced to the Arduino board at the receiver end while on the transmitter end, a GUI application on the cell phone sends ON/OFF commands to the receiver where loads are connected. By touching the specified location on the GUI, the loads can be turned ON/OFF remotely through this technology.

Uses android mobiles internal voice recognition to pass voice commands to yourrobot Pairs with Bluetooth Serial Modules and sends in the recognized voice as astring for example if you say Hello the android phone will return a sting *Hello# to your bluetooth module *and # indicate the start and stop bits Can Be used with any micro controller which can handle strings Examples Platforms : Arduino , ARM , PICAXE , MSP430 , 8051 based and many other processors and controllers.

4.2.5 LED

In the voice-controlled home automation project, LED lights can be controlled through voice commands using a microcontroller and relay board. The system uses voice recognition APIs based on Google to recognize the user's voice and respond with appropriate commands to control the lighting system. The project involves programming the microcontroller in C language, integrating Google APIs and libraries, and creating vocabulary templates to recognize specific words and phonemes. The Android application can be used to instruct the microcontroller to switch the lighting system on/off through the Bluetooth module.

The microcontroller then sends a signal to the relay board, which turns the lights on/off based on the voice commands received from the user. When a low voltage signal is given to the relay, the lights are turned off, and when a high voltage signal is given, they are turned on.

Fig 4.5: Bluetooth Module

4.2.6 DC Motor

DC motors are widely used in voice-controlled home automation systems due to their simplicity, efficiency, and precise control capabilities. A DC (Direct Current) motor is an electric motor that runs on direct current (DC) electricity, converting electrical energy into mechanical motion. In the context of home automation, DC motors are employed in applications such as controlling window blinds, adjusting fans, operating sliding doors, or even in automated furniture like adjustable beds or tables.

Fig 4.6: DC Motor

The basic operation of a DC motor involves a rotating coil within a magnetic field, with the current flowing through the coil producing a force that generates rotational motion. The motor's speed and direction can be controlled by varying the input voltage or using pulse-width modulation (PWM), which adjusts the average voltage supplied to the motor, allowing for fine control over speed and torque. This level of control is essential in automation applications, where precise adjustments to the movement of devices are often required.

In voice-controlled home automation systems, DC motors are typically integrated with microcontrollers, sensors, and actuators that are connected to a central hub or voice assistant (such as Amazon Alexa, Google Assistant, or Apple Siri). When a user issues a voice command, the assistant processes the command and sends the appropriate signals to the microcontroller, which in turn controls the motor’s movement. For instance, a voice command like "open the blinds" would trigger the motor to rotate and pull the blinds up, while "close the blinds" would reverse the motor’s direction. The automation system may also be connected to cloud services, allowing users to

Thus, DC motors play a crucial role in enabling the seamless automation of various household tasks through voice control, contributing to the convenience and efficiency of modern smart homes.

4.2.7 Lithium ion battery

For a voice-controlled home automation project, a lithium-ion (Li-ion) battery offers an ideal power solution due to its high energy density, compact size, and long cycle life. These batteries are rechargeable, making them cost-effective and environmentally friendly, while their low self-discharge rate ensures that devices in your home automation system remain powered even when not in active use. The lightweight nature of Li-ion batteries makes them perfect for integration into small devices such as smart sensors, controllers, and hubs, without compromising on power output. Additionally, their efficient energy delivery supports the consistent operation of low-power electronics like microcontrollers, Wi-Fi modules, and smart locks. With built-in safety features to prevent overcharging and overheating, Li-ion batteries provide a reliable and secure power source, allowing your home automation system to operate seamlessly and with minimal maintenance over time.

Fig 4.7: (Li-ion) battery

4.3 System use cases

System use cases refer to the different scenarios and interactions between users and the proposed system. In the case of the voice-controlled home automation project, the following use cases can be identified:

1. Turning on/off lights: The user can speak a command to turn on or off the lights in a particular room or area of the house.

2. Controlling appliances: The user can control various home appliances such as TV, fan, music system, or other smart devices through voice commands.

3.Personalized settings: The system can be programmed to recognize every users and personalize settings and preferences for everyone.

Overall, the voice-controlled home automation system can provide users with increased convenience, efficiency, and accessibility in managing various aspects of their home environment through simple voice commands.

In this project, a simple Voice Activated Home Automation system is designed. Voice commands are used to control different appliances. We will now see the working of the project. All the connections are made as per the circuit diagram above. After making the necessary connections, we must switch on the power supply to the circuit. Now, we need to pair the Phone's Bluetooth to the HC – 05 23 Bluetooth Module. Before that, we must install the App mentioned above in the phone. The home screen of the app looks something like this.

When the Arduino Bluetooth Controller app is opended the bluetooth device automatically connected with Bluetooth module. If the devices are not paired earlier, we need to pair them from Mobile.

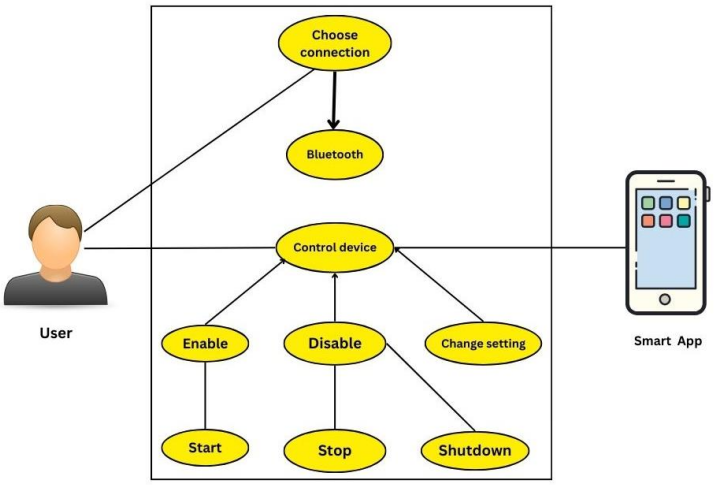

Fig 4.8: Use Case

METHODOLOGY

There are a certain number of ways which can be used to complete the project, that means tools and techniques which are both hardware and software based. Now here comes the important point of identifying those tools, and this is where we identify them considering previous literature review. This not only helps to identify the correct methods, but also gives a suitable contrast and comparison approach towards various methods that are adopted before, and the outcome produced by them.

5.1 Software Methodology: The software methodology for a voice-controlled home automation project typically follows an Agile development approach, focusing on iterative design, integration, and continuous improvement. The process begins with requirements gathering, where functional needs such as voice command recognition, device control, and automation routines are defined, along with non-functional requirements like performance, security, and scalability. The system architecture is then designed, determining whether to use a cloud-based or local network architecture for device communication. Voice command processing is integrated with popular voice assistant platforms (Google Assistant) using their SDKs or APIs, while smart devices are connected through standard communication protocols (Bluetooth etc.). Once development begins, key components like voice command interpretation, device control APIs, and automation logic are implemented, followed by rigorous testing, including unit testing, integration testing, and end-to-end system testing. The project is then deployed, using continuous integration/continuous deployment (CI/CD) pipelines to streamline updates and ensure smooth performance. Post-deployment, user feedback is collected to refine features and address any issues, ensuring the system remains responsive, secure, and user-friendly. Throughout the project, regular security audits and performance monitoring are conducted to maintain high standards of data protection and system reliability.

5.2 Hardware Methodology: If we look at the hardware methodologies, it's been clear from our project that we have used a microcontroller, as this is the basic thing for carrying out all the necessary compilation of program and cause the effect on the utilities according to the input by the users. There are a number of microcontrollers that are available in the market, like raspberry pie, Arduino Uno etc. But according to our comfort and the efficiency that we were looking for, Arduino Uno is the best one to be chosen for our project. Raspberry pie is quite complex, as it uses the Linux based operating system and it uses the python language. To work on this language was totally new to us, so we decided to rather go for the Arduino microcontroller because of its simplicity and efficiency.

5.3 Arduino Programming:

5.4 Bluetooth Communication Setup:

- In the Arduino IDE, write a program that reads Bluetooth data coming from the smartphone via the Bluetooth module (HC-05/HC-06).

5.5 Control Logic for Fan and Light:

- The program will process incoming commands to control the fan and light. Example commands could be:
  - "Turn on fan"
  - "Turn off fan"
  - "Turn on light"
  - "Turn off light"
- The Arduino receives these commands and activates/deactivates the corresponding relay, switching the fan or light on or off.

SYSTEM DESIGN

In this project, we are combining two things together, hardware and software. As we are coding in the microcontroller and the software we need to be aware of the developing process of the application and the hardware. As we have used SDLC (Systems development life cycle) method to demonstrate the developing steps of the hardware and the software. We have planned everything in this project in a sequence so that all the project goals are achieved as required. So, for system design, we have used certain criteria that could combine both software and hardware in an orderly manner. In this chapter, we will describe the tools and skill required to develop a system with the combination of software and hardware.
To illustrate our system design we have used various diagrams, like activity diagram, use case diagram, data flow diagram and Gant chart et

6.1 Circuit Diagram

Circuit diagrams are the illustrative diagram to show the circuits that help engineers to understand which element is connected to where and how. It is a graphical representation of wires, cables and boards together [24]. As our project is based on the circuit, where all the elements of the project are interconnected. Following circuit design shows the circuit diagram, where Arduino device is connected to the circuit Board, which is further connected to the utilities i.e. light and fan. There is also a Bluetooth module connected which is responsible for receiving the signals from the mobile application.

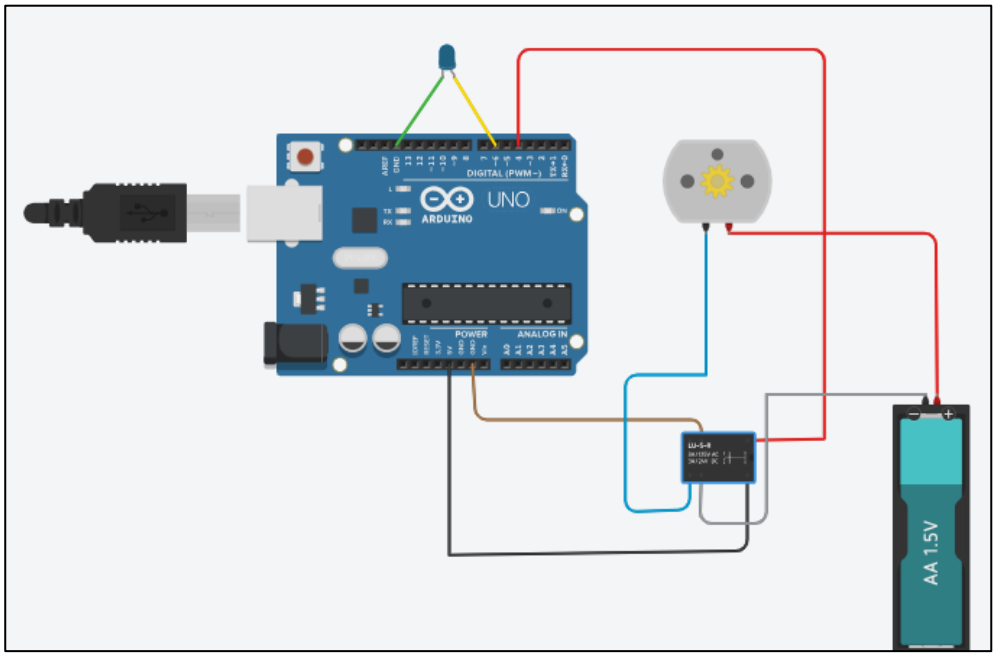

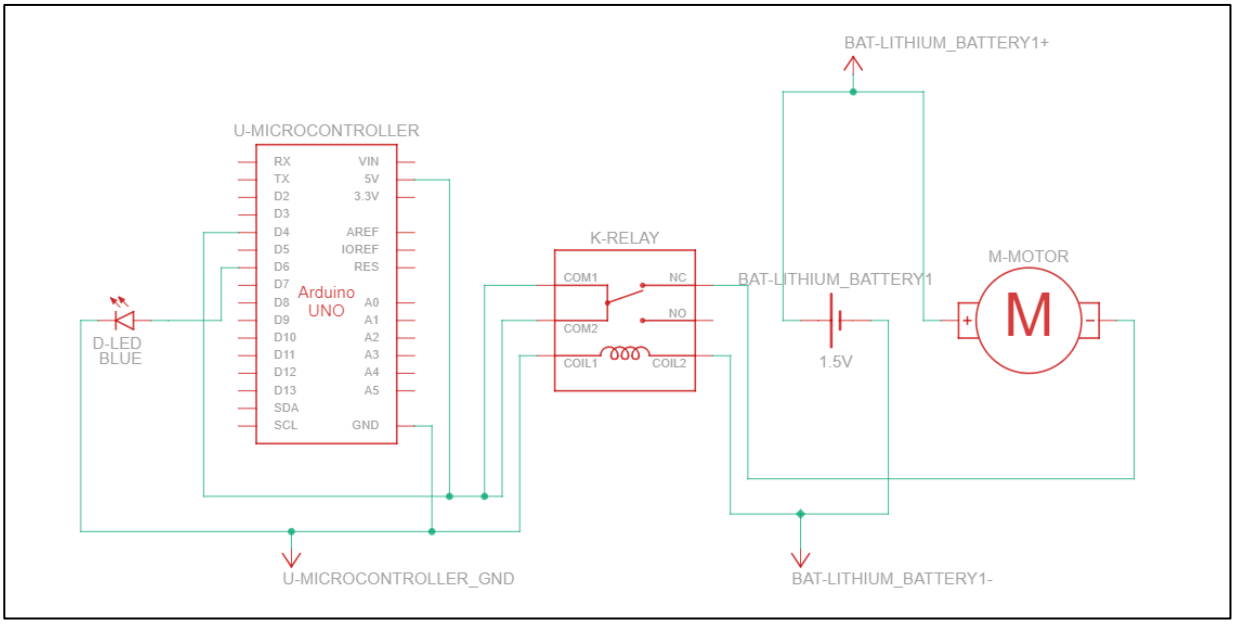

Fig 4.9: Circuit Diagram

6.2Flow Chart Diagram

The user will communicate to Android application through the Arduino Uno via Bluetooth module. This model is very resilient and gauge able, maximum efficiency, safety and securely added smart home appliances with least amount of human effort. The Bluetooth signal having most efficient energy to connect any signal without loss of information with least harmonics. Home automation system main part consists of Arduino with microcontroller. The people must have mobile application with proper connection. It should be used as multi appliances works as together. The Arduino board is configured for each home appliances using coding in microcontroller. By the help of Microcontroller, we can control the electromagnetic relay which works as a switch to receive a signal from the Arduino through Bluetooth module HC-05. When the signal transmits from transmitter as datasheet to relay then the relay works as switch and control many appliances of smart home(multitasking). There are three main parts of this home automation which is given below.

1. Arduino Uno
2. Bluetooth HC-05
3. Relay Drivers

At first, we want to select eight one-of-a-kind sorts of Voice Commands to govern four devices. Particular voice instructions are used to govern a tool. For example, the “turn on light” command is used to Turn ON the Light, and the “turn off light” command is used to Turn OFF the Light. Also same for the fan, “turn on fan” command is used to Turn on fan, and the “turn off fan” command is used to turn off the fan. These Voice instructions are utilized in Arduino code.

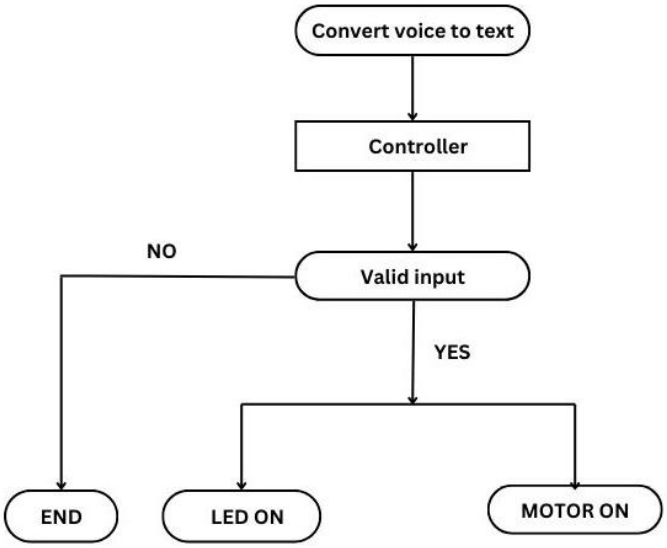

Fig 4.10: Flow Chart Diagram

6.3 Gantt Chart

Gant chart is used to display the tasks that are performed throughout the project according to the target period of time. It displays all the scheduled dates for east subtask, stating the start date and end date. In other words, it is the graphical representation of all the task with respect to time . In following Gant chart we have shown the division of the month we have taken to do complete this project from June until Ocober. We have parted the chart in 8 different parts from the starting to the finalizing date which actually illustrates all the subtasks that are performed accordingly.

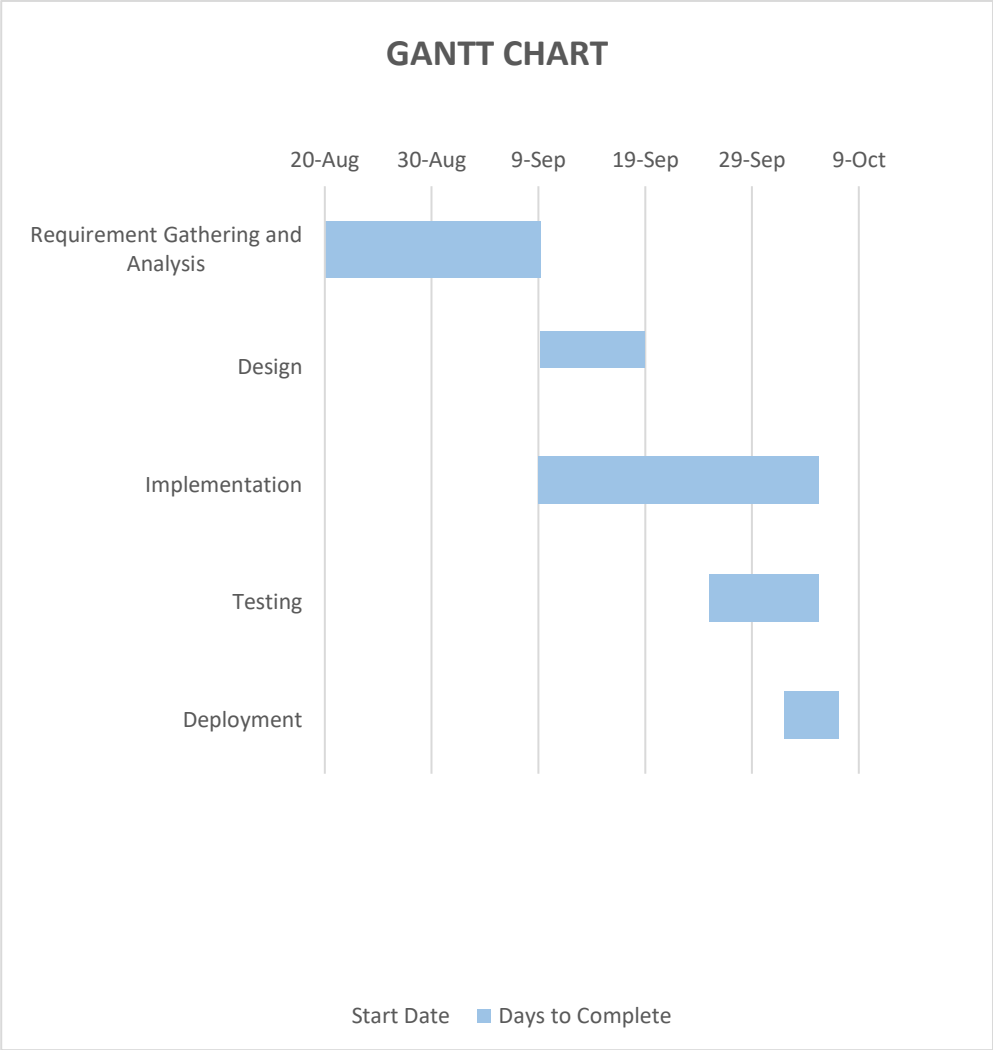

Fig 4.11: Gantt Chart Diagram

CODING

7.1 Coding

```
#include <SoftwareSerial.h>
// Bluetooth module pins
const int bluetoothTx = 2;
const int bluetoothRx = 3;
// LED pin
const int ledPin = 6;
// Relay pin
const int relayPin = 4;
SoftwareSerial bluetooth(bluetoothTx, bluetoothRx);
void setup() {
  Serial.begin(9600);
  bluetooth.begin(9600);
  pinMode(ledPin, OUTPUT);
  pinMode(relayPin, OUTPUT);
}
void loop() {
  // Receive voice command from Bluetooth module
  String voiceCommand = bluetooth.readString();
  if (voiceCommand == "turn on LED") {
    digitalWrite(ledPin, HIGH);
  } else if (voiceCommand == "turn off LED") {
    digitalWrite(ledPin, LOW);
  } else if (voiceCommand == "turn on fan") {
    digitalWrite(relayPin, HIGH);
  } else if (voiceCommand == "turn off fan") {
    digitalWrite(relayPin, LOW);
  }
}
```

TESTING

Testing is a critical part of any software development project, and the voicecontrolled home automation project is no exception. In this project, testing will involve several stages, including unit testing, integration testing, system testing, and user acceptance testing.

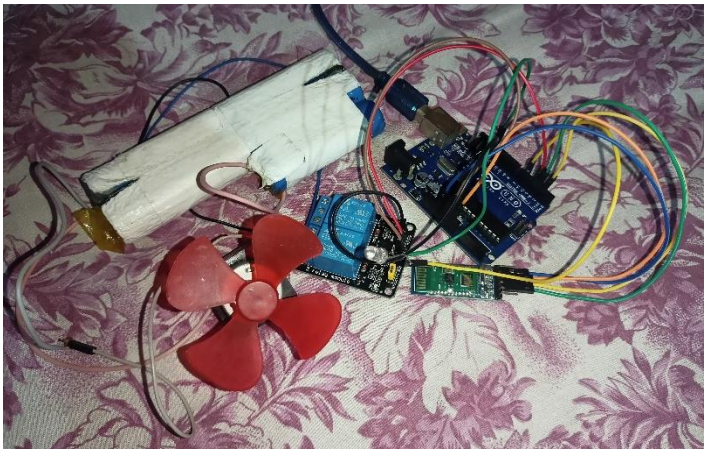

Fig 4.12: Testing with all appliance off

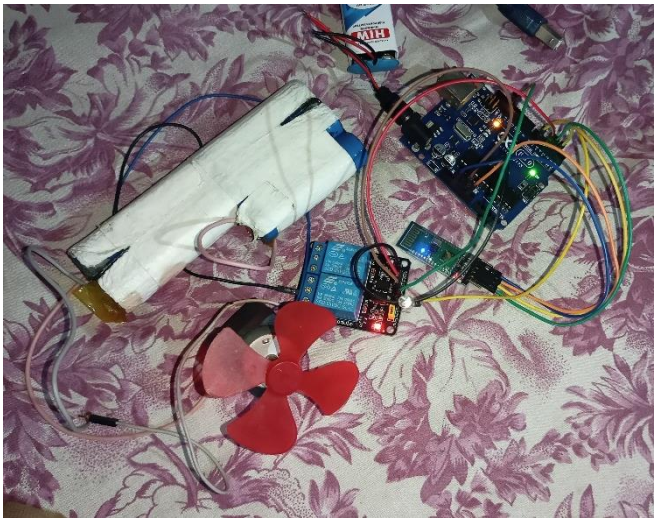

Fig 4.13: Testing with Power Supply

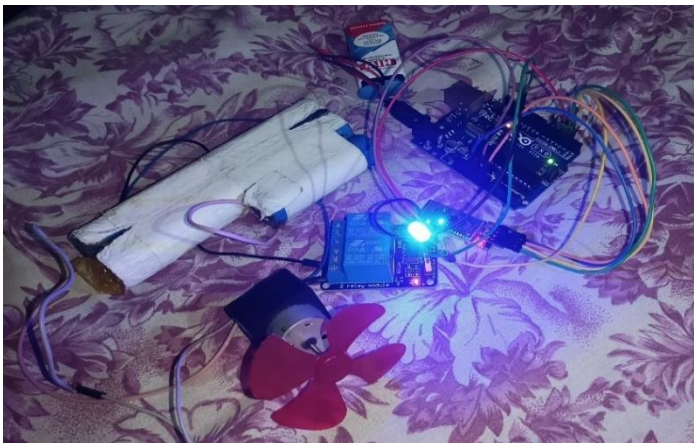

Fig 4.14: Testing with LED on

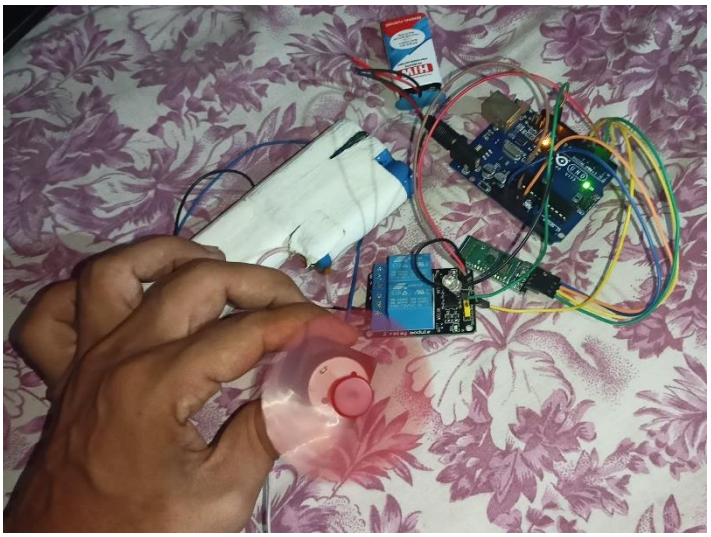

Fig 4.15: Testing with Fan on

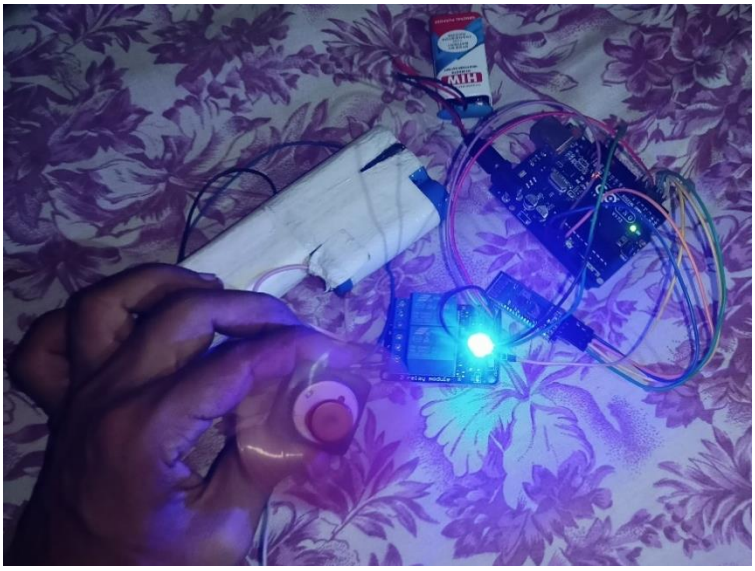

Fig 4.16: Testing with Both Fan and LED on

User acceptance testing is the final stage of testing and involves evaluating the system with real users in a real-world environment. This testing will be done using test cases that simulate different usage scenarios and user interactions. The purpose of user acceptance testing is to ensure that the system meets the needs and expectations of its users and is easy to use and understand.

To ensure that testing is conducted effectively, a comprehensive testing plan will be developed that outlines the testing approach, test cases, and expected outcomes. The testing plan will also specify the testing tools and techniques that will be used, as well as the roles and responsibilities of the testing team.

Every step of the system's creation included a performance test and measurement on a breadboard. This process involved mounting all the components onto their respective circuit positions on the breadboard. The microcontroller's configured output to input was also considered when mounting it. The microcontroller was examined after programming, and it was discovered to be functioning properly. After completing the component mounting, the entire system was evaluated, and the outcomes were measured. A digital multimeter was used to verify that the battery power source of 9V was adequate to power the Arduino Uno. The complete system was built in this manner during the laboratory installation.

Comments for application	**Description of comment**
Turn on LED	**Switch on LED**
Turn off LED	**Switch off LED**
Turn on fan	**Switch on fan**
Turn off fan	**Switch off fan**

Fig 4.14: Comments for application

In addition to testing, the project team will also conduct regular quality assurance reviews to ensure that the project is meeting its quality standards. These reviews will be conducted at key milestones throughout the project and will involve a review of all project deliverables to ensure that they meet the required quality standards. Overall, testing is a critical part of the voice-controlled home automation project, and the project team will take a rigorous and comprehensive approach to testing to ensure that the system meets all its requirements and performs as expected in a real-world environment.

CONCLUSION

7.1 Conclusion

The following conclusion is a commentary of what extent the objectives were achieved.

Conclusion 1: The first objective of the study was to implement the voice user as an input to microcontroller to always control the lighting system. From the results, the Arduio Bluetooth Controller application was used successfully to capture the voice commands. The voice recognition APIs in the application could identify the specific commands used except for a few instances. The commands were used to activate the respective relays thereby controlling the lighting system.

Conclusion 2: The second objective was to use Bluetooth connection to control the lights via a phone from anywhere in a room. Bluetooth technology was effectively used to send the voice commands to the microcontroller. Based on the results, it is evident that the Bluetooth module was able to connect to the phone and transmit the voice input to the microcontroller successfully.

Conclusion 3: The third objective of the study was to use a relay board to control the switching on and off specific bulbs. The 4-channel relay used in the project controlled the four lighting points according to the voice commands efficiently. From the results, the lighting points, that is, room, table, bedroom, and security, was turned on and off respectively as per the user input hence this objective was achieved. The Voice Controlled Lighting System was built and implemented successfully.

In this project we have successfully implemented voice-controlled home automation system controlling relays using Arduino with Bluetooth module HC-05. Our implemented module is more dependable and flexible to control any loads and the coverage area for wireless control is 10 meters. Hence this project can be useful for a real time voice-controlled home automation. Thus, Arduino based voice-controlled home appliances proves to be a better remote-controlled operation on home appliances using Bluetooth module HC-05. This project can be extended 48 for many automation applications such as industrial automation, automotive, military, healthcare, transportation and so on. Further the coverage area can also be increased using GSM modules.

7.2 Future work

The future work for the voice controlled home automation project could involve various areas of improvement and expansion. Here are some directions for future work:

1. Integration with smart home devices: The voice-controlled home automation system could be further integrated with a wider range of smart home devices, such as smart thermostats, smart locks, and smart speakers. This would require expanding the system's capabilities to recognize and respond to more complex commands.

2. Machine learning algorithms: The system's speech recognition capabilities could be improved using machine learning algorithms, which can adapt and learn from user behaviour over time. This would require collecting and analysing enormous amounts of speech data to train the algorithms.

3. User interface improvements: The system's user interface could be improved to make it more intuitive and user-friendly. This could involve redesigning the system's mobile app or creating a web interface for controlling the system remotely.

4. Security enhancements: The system's security could be strengthened to prevent unauthorized access or hacking. This could involve implementing stronger authentication mechanisms or encrypting data transmissions.

5. Voice recognition accuracy: Improving the accuracy of voice recognition would be a critical area of focus for the future. This could be done by increasing the vocabulary and commands the system can recognize, improving noise-cancellation technology, and incorporating machine learning algorithms to enhance speech recognition.

6. Integration with other AI technologies: The system could be integrated with other artificial intelligence technologies, such as natural language processing or computer vision, to enable more advanced features and functionality.

7. Energy efficiency: Future work could also focus on improving the energy efficiency of the system. This could involve optimizing the system's hardware components or developing algorithms to minimize energy consumption. Overall, the future work for the voice-controlled home automation system would focus on expanding its capabilities and improving its functionality, usability, and security. The advancements in technology and increasing demand for smart homes and IoT devices will continue to drive innovation and development in this area.

REFERENCES

1. Cui, J., et al. (2021). Voice-Controlled IoT Applications: Trends and Challenges. IEEE Internet of Things Journal, 8(3), 1569-1582.

2. Aqeel-ur-Rehman, Royda Arif, and Hira Khursheed. "Voice controlled home automation system for the elderly or disabled people." *Journal of applied environmental and biological sciences* 4.8S (2014): 55-64.

3. Prasad, Dusi Durga, et al. "Voice controlled home automation." *2021 Second International Conference on Electronics and Sustainable Communication Systems (ICESC)*. IEEE, 2021.

4. Kumar, Sushant, and S. S. Solanki. "Voice and touch control home automation." *2016 3rd International Conference on Recent Advances in Information Technology (RAIT)*. IEEE, 2016.

5. Mittal, Yash, et al. "A voice-controlled multi-functional smart home automation system." *2015 Annual IEEE India Conference (INDICON)*. IEEE, 2015.

6. Sen, Sonali, et al. "Design of an intelligent voice controlled home automation system." *International Journal of Computer Applications* 121.15 (2015).